THE VARIATION OF TEMPERATURE OF DIFFERENT OIL RESERVOIR DENSITIES EXPLOITED BY THERMAL METHODS

PhD Student Eng.Ionescu (Goidescu) Nicoleta Mihaela [1]
Prof. Dr. Eng. Vasiliu Viorel Eugen [2]
Prof. Eng.Onutu Ion [3]
[1, 2, 3] University of Oil and Gas Ploiesti, Romania

ABSTRACT

Enhanced oil recovery (E.O.R) is oil recovery by the injection of materials not normally present in the reservoir. Thermal methods such as the steam injection process are the best heavy oil recovery methods. Improvement of mobility ratio in the reservoir and economic recovery from heavy oil reservoirs depend mainly on reduction of heavy oil viscosity. For a steam injection process should consider the heat and mass transfer.

Heavy oil reservoirs contain a considerable amount of hydrocarbon resources of the world. Meanwhile, further demand for oil resources in the world reduction of natural production from oil reservoirs, and finally price of oil in recent years have attracted notices to production methods from heavy and extra heavy oil reservoirs. High viscosity and great amounts of asphaltene in these hydrocarbons make difficulties in extraction, transportation, and process of heavy oil.

In Romania, there have been numerous theoretical and laboratory researches, as well as site experiments on the application of secondary recovery methods, Romanian specialists having a wide experience in this field

Keywords: *Thermal, thermodynamic, viscous, mobility, conductivity*

INTRODUCTION

Steam injection is the most effective method for viscosity reduction of heavy oil.[1] Meanwhile, modeling of steam injection wells for continuous estimation of pressure and temperature as a function of depth and time is crucial for well design, planning of steam injection projects and data gathering for reservoir management. Once the steam is injected into the good design, both pressure and temperature of the injected steam and accordingly the densities of water and steam phases will change. These changes are due to heat exchange between steam and cold formation surrounding the well, the friction between steam and the inner tubing surface and variation of hydrostatic pressure along the depth. More importantly, the quality of injected steam will drop due to heat loss from the wellbore system towards the cold formation. Multiphase nature of flow inside the wellbore , complex heat transfer mechanisms between the wellbore and the surrounding medium make the entire system intricately coupled and extremely difficult to solve.[2], [3].

Thermal energy is transferred to the thermodynamic agents (gas, hot water, steam – by injection of hot fluids) and transported by surface pipes, injection wells and then –through the reservoir (by steam injection and underground combustion).The transformation provide necessary energy for transporting the oil from the reservoir to the surface .The effect of heat on heavy and viscous oil is very important and there is no exploitation technology to rival with thermal methods. The use of thermal recovery permits: 1. Primary exploitation of heavy and/or viscous oil 2.bituminous sand exploitation.3.secondary or tertiary recovery of oil from energy exhausted reservoirs.

During exploitation by steam injection or underground combustion appear physical and chemical modifications including changes in the thermal conductivity. The termal conductivity of an oil reservoir can be estimated by computations, using idealized models, or by expressing this property as a function of other properties of the reservoirs:density, porosity, permeability.[4], [5]

To measure the thermal conductivity of an oil reservoirs in its initial stage are available in literature [6], [7], [8]

This paper presents results of experimental studies regarding the estimation of the thermal conductivity in the following conditions :

- Sample composed of rock and fluids, combustioned in laboratory
- Sample of fluids taken directly from the oil fields from Romania

METHODS

The laboratory experiments used installations from the laboratories of Oil and Gas University Ploiesti and samples fluids and rocks from Romania fields situated in different areas.

Depending on the density of the crude oil , a classification of the crude oil was made and can be seen in table 1.

Table 1 Oil classifications

	Relative density		Oil viscosity in res condition
	Density at 15°	API (15°)	mPa*s
Slight oil	<0.870	>31.1	-
Medium oil	0.870...0.920	31.1-22.3	-
Heavy oil	>0,920	<22.3	<10000
Bitumen	>1	<10	-
Tar sands	-	-	> 10000

The flow properties are better described by the viscosity. As such some crude oil may be heavier , but have a lower viscosity than the light ones.

For the experiments have been used 4 samples of oil from different oil fields with properties presented in table2.

Table 2 Characteristics of the fields

Field	Reservoirs		Rock properties			Oil properties	
	Thickness	Depth	Permeability	Porosity	Oil Sat	Density	Viscozity
	m	m	mD	%	%	Kgf/dm3	mPa*s
A	10	<1500	120	22	66	0.8	10
B	15	1100	130	20	65	0.85	6.4
C	20	1300	110	23	70	0.91	70
D	25	1000	145	25	68	0.98	> 2000

In order to carry out the experiments, a combustion mini-cell was constructed, made of steel with two hermetically sealed caps .It was filled with two types of sands : one with porosity 23% and bituminous sand. Bitumen, dense, highly viscous petroleum based hydrocarbon that is found in deposits such as oil sands and pitch lakes.[9], [10]

Bitumen is defined by the U.S Geological Survey as an extra-heavy oil with an API gravity less than 10º and a viscosity greater than 10000 centipoise. At the temperatures normally encountered in natural deposits , bitumen will not flow ; in order to be moved through a pipe , it must be heated and, in some cases diluted with a lighter oil.It owes its density and viscosity to its chemical composition-mainly large hydrocarbon molecules known as asphaltenes and resins, which are present in lighter oils but are highly concentrated in bitumen.

METHODOLOGY

The experiments were conducted in 4 different days for different densities of the oil and follow the same procedures for every experiment following the safety rules to avoid possible accidents.

For better understanding of experiments was necessary to review the specific literature from Romania about graphs represent the variability of temperature, time and densities for different oils .[11]

Have been decided to built in the end of the experiments, a ternary diagram which will displays the three variable used: time, temperature and densities.

These diagrams were built using specific AutoCAD(CAD) software which is a computer aided design that architects, engineers and construction professionals rely on to create precise 2D and 3D drawings.Draft and edit 2D geometry and 3D models with solids, surfaces and mesh objects.[12]

The figure 1 shows a scheme of the installation design and made by the author.

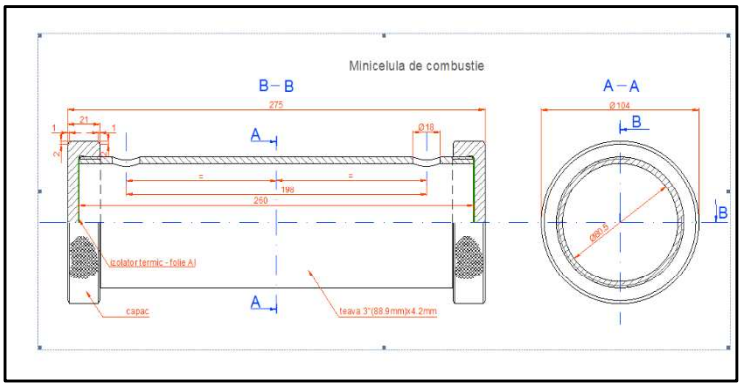

Figure 1 The installation for preparing the sand combustion

As was specified before, the author organized 4 experiments (because of the 4 oil densities).The experiments follow the same steps presented below:

1. The .mini-cell was filled with about 500 gr of sand (porosity 23%)

2.Sand was saturated with oil of different density (every experiment with specific density)

3. The cell fixed on a support, added 2 stone thermometers left and write (Figure 2)

4. On the right side a heat source was applied and starting to read the temperature T1(right) and T2 (left).Than recorded into a table.

5. For each experiment was constructed a ternary diagram with the variable T1, T2, time elapsed between two temperature reading.

Figure 2 : Oil samples, Mini-Combustion cell , 2 stone thermometers

The ambient temperature was every day 24 ^{0}C.Experiments were continuously monitored to register the temperature till 200 ^{0}C.(Figure 3)

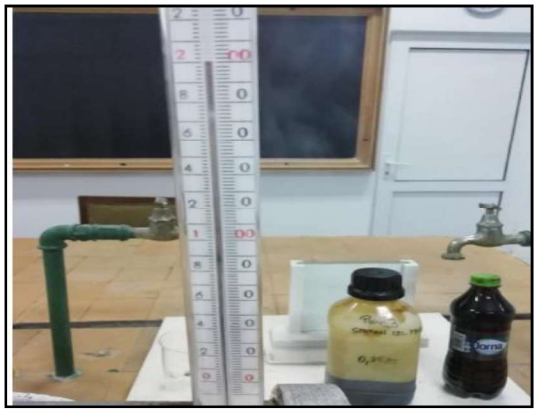

Figure 3: Maximum of temperature 200 ^0C

When reaching the temperature of 100 ^0C was observed that the oil started to boil for a short time and was supposed is because of water presence in the sand.

Another observation common to all 4 experiments was that around 180 ^0C appeared a strong smell of burnt hydrocarbons.

RESULTS

These experiments aimed to assimilate more clearly the notion of thermal conductivity, which is a characteristic property of each body, which can be determined experimentally or can be calculated with different formula. It has been found that heat transport can occur:

Electronic-the electrons move from the high temperature areas to the low ones , tranfering with them the termal energy

The heat transfer is dependent of oil density (experiments 1- 4), sand porosity and the variation in time can be seen on the graphs.

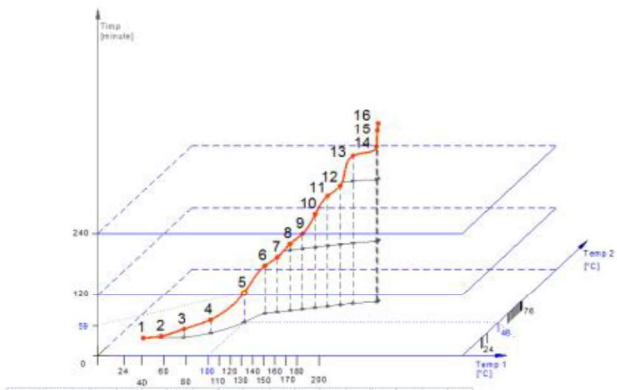

Experiment #1																
Temp1 [°C]	24	40	60	80	100	110	120	130	140	150	160	170	180	200	200	200
Temp2 [°C]	24	24.5	25	31	46	58	60	62	64	66	68	70	72	74	76	76
Time [*minute]	0	3	16	26	59	95	109	132	149	184	217	234	289	304	334	349

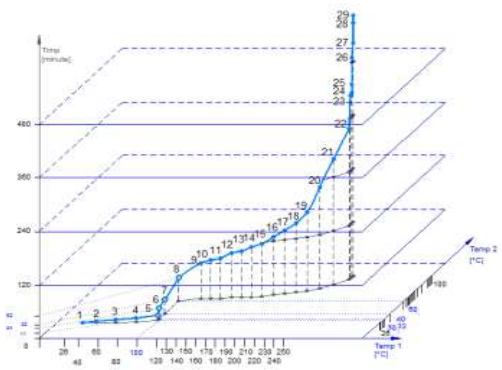

Experiment #2																											
Temp1 [°C]	26	40	60	80	100	100	100	100	120	130	140	150	160	170	180	190	200	210	220	230	240	250	250	250	250	250	250	250	250
Temp2 [°C]	26	26	26	27	30	32	40	50	64	84	64	66	66	66	67	70	72	74	76	80	86	94	96	98	98	98	100	100	100
Time [*minute]	0	3	7	9	11	24	32	52	79	86	90	99	103	112	118	129	141	154	176	226	280	338	409	413	431	491	521	566	582

Graphic variation of temperatures -Experiments 1,2

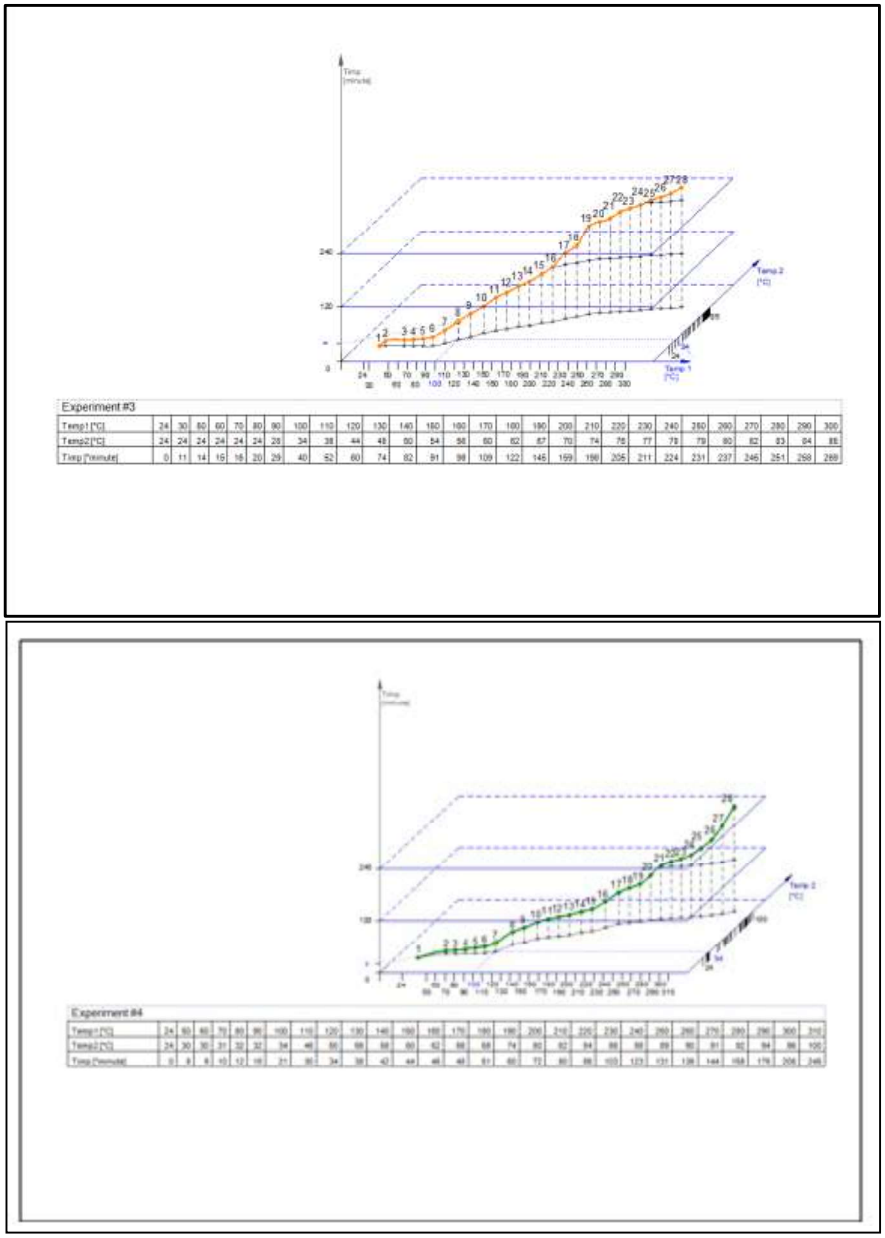

Figure 5 – Graphic variation of temperatures -Experiments 3,4

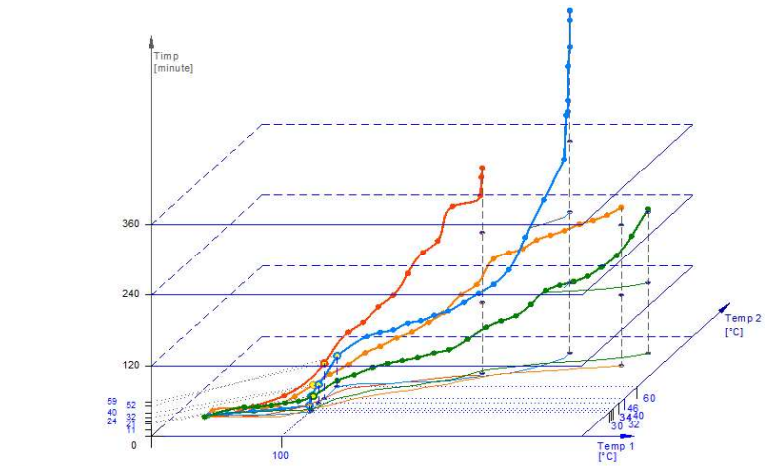

	Exp 1	Exp 2				Exp 3	Exp 4
Temp1 [°C]	100	100				100	100
Temp2 [°C]	46	30	32	40	60	34	34
Timp [°minute]	59	11	24	32	52	40	21

Figure 6 Graphic variation of temperatures –Experiments 1-4

It is known that the thermal conductivity varies with the nature of the body, with its state of aggregation, with the humidity of the body, with the nature and concentration of impurities contained in the body, with the porosity.

Thermal conductivity is a characteristic property of the environment, analogous to electrical permittivity, molecular diffusion or electrical conductivity. Solids and fluids that make up a hydrocarbon deposit represent a porous medium saturated with fluids. In a permanent thermal conduction regime, a porous medium saturated with fluids can be assimilated to a continuous equivalent medium for which the thermal conductivity is defined a s a tensor. This depends of the conductivity of each phase.

CONCLUSION

Information technology in the oil and gas complex can be widely used at all stages, namely oil and gas exploration, extraction, transportation and processing.

Improvment of production in heavy oil reservoirs depends on reducing oil viscosity, and understanding better the heat transfer . The technologies of construction of ,, inteligent'' injection and production wells are the most important tasks in actual fields from Romania. In the future, special attention should be paid to the development of special mature fields from Romania.to ensure the automation of basic processes in the design and technological control over exploratory drilling.

The task of cost reduction in production, transportation and processing of hydrocarbons provides an opportunity to analyse the thermal methods and to apply the best method.

The role of experiments were to visualise the variation of heat transfer inside a mini-combustion cell. Have been used 4 different samples of crude oil of different densities: low, medium, high values. (500ml for every sample).The cell was completed with quartzite sand and after saturated in every experiment with different oil density.

However, during experiments the author used a heat source trying to achieved

300 ^{0}C.During experiments the author considered an idealized oil field with parallel heat transfer, porosity of sand 20% and different oil density. The effect of pressure was not take in consideration. In thermal processes the heat transfer from the hot agent to the environment is done by conduction , convection or radiation.

Building these diagrams based on temperature control, heat transfer and different oil type will be more easier to apply the thermal methods.

Romania is classified as a mature hydrocarbon province, but still the most important producer in the South-Eastern European countries. Significant oil potential is present in oil fields and the Enhanced oil Recovery methods will represent new concept for increasing production. There are ongoing effort to redevelop mature oil fields, currently used steam injection, in-situ combustion, hot water injection, polymer injection.

ACKNOWLEDGEMENTS

The author thanks OMV Petrom Romania and National Mineral Agency for borrowing crude oil samples.

REFERENCES

[1] Larry W. Lake, Enhanced Oil Recovery, pp.53-10, Ed.2019

[2] Abrams A., The influence of fluid viscosity, Interfacial Tension and Flow Velocity on Residual Oil saturation Left by Watreflood, Society of Petroleum Engineers Journal, 5 (1975), 437-447.

[3] Buckley S.E., Leverett M.C.,,Mechanism of fluid Displacement in Sands transactions American Institute of M and Metalurgical Engineers, 146 (1942), 107-116

[4] Caudle B.H, fundamentals of Reservoir Engineering, Part II, dallas: Society of Petroleum Engineers

[5] Anand, J.Somerton, Gomma E.- Predicting thermal conductivities of formations from other known properties, SPEJ,Oct 1973

[6] Beck A.E , An improved method of computing the termal conductivity of fluid filled sedimentary rocks, Geophysics, vol 41, nr1, February 1976

[7] Cretu I., Beca C., Babskow Al., Ingineria zăcămintelor de hidrocarburi, vol 1, 1981

[8] Cristescu T., Osnea Al., Marcu N. Aspecte privind calculul fluxului termic disipat la injectia aburului intr-un zacamant de petrol, Revista termotehnica, nr.1 , anul II, Bucuresti 1994

[9] Cristescu T. Consideratii energetic privind extractia titeiului prin metode termice, National Coneference News and Perspectives in drilling and extraction, Ploiesti ,1994

[10] Branoiu Ghe., Frunzescu D., Nistor I, Ionescu (Goidescu) Nicoleta Mihaela, On some mineralogical characteristics of the reservoir rocks in the Moreni field (Carpathian Foredeep Romania)

[11] Ionescu (Goidescu) N., The role of 3D seismic interpretation for building structural model-Case study in the Muntenia oil field (Romania)

[12] Autodesk Autocad LT,.2018 for WINDOWS